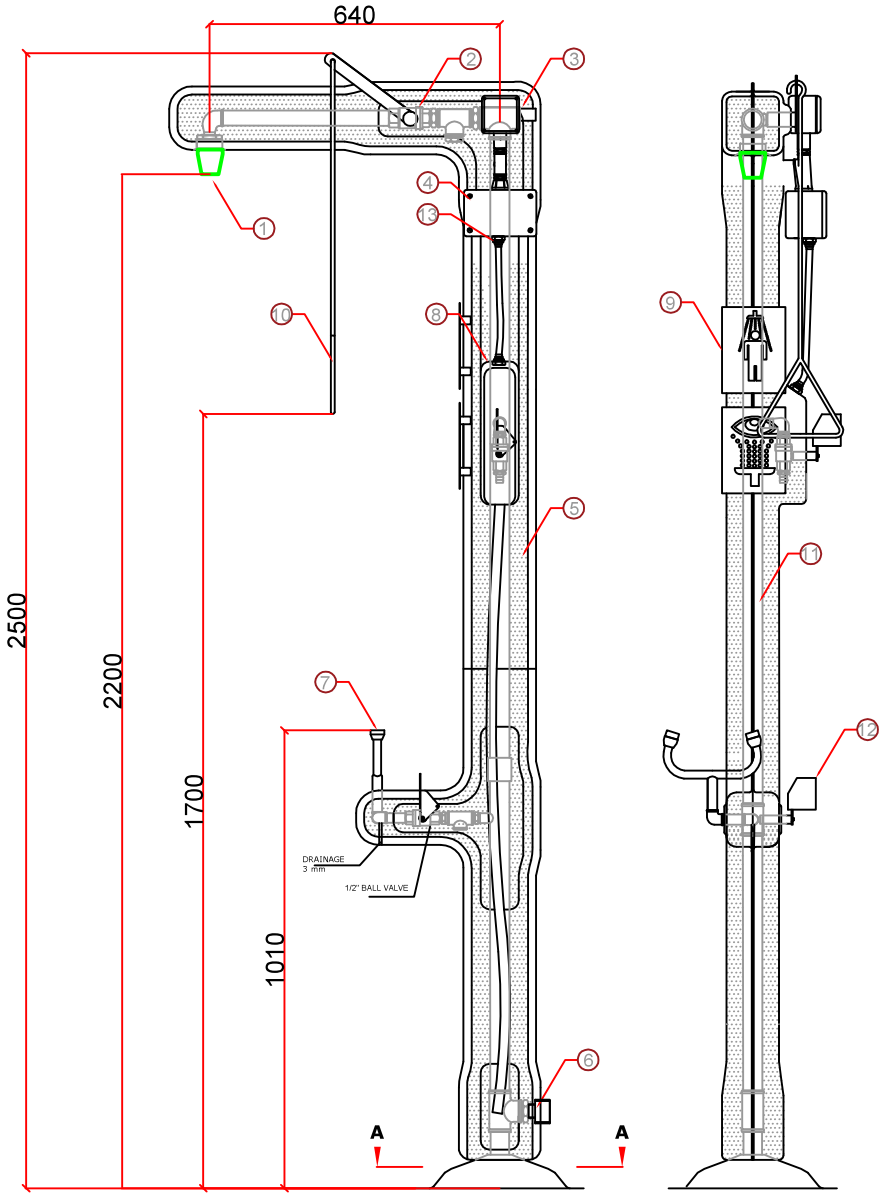

-side view-

-front view-

Standards: EN 15154-1, EN 15154-2
Water Flow: 11,4 lt/ min for Eyewash
75,7 lt / min for Shower
Total Weight: 105 kg
Packed Dimensions: 255x101x65 cm

Static test pressure : 7 bar
Min using pressure : 1,4 bar
Max using pressure : 2,8 bar

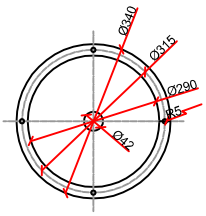

section A-A

NO.	DESCRIPTION	MATERIAL
13	Rakor(IP67)	Brass
12	Push Handle Control for Eyewash	Stainless Steel 304
11	1 1/4" Pipe	Stainless Steel 304
10	Pull Rod Control for Shower	Stainless Steel 304
9	Emergency Sign	PVC (Luminous)
8	Electrical Heating Tape	Ex-proof (Zone I)15 W / m
7	Spray Nozzles	Brass
6	1" Water Inlet (FNPT)	Stainless Steel 304
5	Insulation	Polietilen
4	Mechanical Thermostat(IP66)	Exproof
3	Junction Box(IP67)	Exproof
2	1" Ball Valve	Stainless Steel 304
1	Shower head	Polyethylene(Green)

REV.	DATE	DESCRIPTION	DESIGNED	CHECKED	APPROVED
A		FIRST ISSUE	SS	FA	ST

CUSTOMER

STATUS: FOR INFORMATION ☐ FOR REVIEW ☐ FOR APPROVAL ☐ FOR RFQ/DESIGN ☒

ORIGINAL EDITION: DESIGNED ✓ SS; CHECKED ✓ FA; APPROVED ✓ ST

SIZE: A4 SCALE: 1/100

PRODUCT: FREEZE PROOF CABLE HEATED AND INSULATED EMERGENCY SHOWER AND EYEWASH EXPROOF

DRAWING NUMBER/DATE: 44/16-1

SHEET: 1 OF: 1

DRAWING NAME: 23-1503-460